MACHINE ELEMENTS 1

PROBLEM BOOK

SAMPLE PAGES

9 chapters · 162 problems · step-by-step solutions

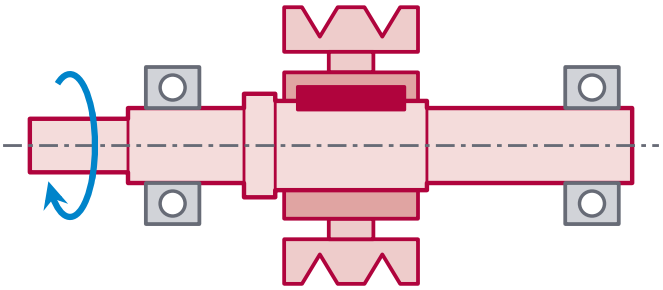

Ertan Sinan Şahin

ertansinansahin.com

How to use this book

- Each chapter opens with a reminder box summarizing the definitions and formulas the problems rely on.
- Difficulty: ★☆☆ basic ★★☆ intermediate ★★★ advanced. Each chapter has a few multiple-choice concept questions; each chapter ends with exam-style mixed problems.
- The dotted area below each problem is for your own work. Solve first; if stuck, go back to the reminder box and the lecture notes, and look at the solution last.
- All solutions are at the end of the book. The Solution → link next to a problem takes you to its solution, and ← Problem takes you back. Short answers are in the **ANSWER** box.
- **Units and signs:** SI units throughout; stresses and strengths in MPa, moduli of elasticity in GPa, forces in N or kN, moments in N·m. Normal stress is positive in tension. In the figures, force, moment and torque arrows are red.
- **Appendices:** The appendices at the end of the book (materials; fatigue; tolerances and fits; bolts and screws; keys and splined shafts; springs) contain the material data, factors and standard dimensions not given in the problems; the problems are solved with the data in the problem statement and these appendices only.
- **Midterm and final:** In most schools the midterm and final topics are split as follows:

  Midterm Ch. 1–5 design and safety, tolerances, static strength, fatigue, shafts

  Final Ch. 6–9 shaft–hub connections, bolts, welded and riveted joints, springs

  Some schools teach shafts, bolts, welds or springs in the second course; schools that complete the subject in a single term also need *Machine Elements 2*. Choose the chapters to study according to your own course syllabus.

Contents

Page numbers refer to the full book. Chapters in color are in this sample; click to go there.

1 Introduction: Design and Safety ..... 14 problems 4

2 Tolerances and Fits ..... 16 problems 16

3 Static Strength ..... 18 problems 27

4 **Fatigue** ..... 22 problems 40

5 Shafts ..... 20 problems 56

6 Shaft–Hub Connections ..... 16 problems 72

7 **Bolts and Power Screws** ..... 22 problems 84

8 Welded, Riveted and Bonded Joints ..... 16 problems 97

9 **Springs** ..... 18 problems 107

Solutions 118

CHAPTER 4

FATIGUE

components

$\sigma_m = \frac{1}{2}(\sigma_{\max} + \sigma_{\min}),\ \sigma_a = \frac{1}{2}(\sigma_{\max} - \sigma_{\min})$

stress ratio $R = \sigma_{\min}/\sigma_{\max}$

S-N line $S_f = aN^b,\ a = \dfrac{(fS_{ut})^2}{S_e},\ b = -\dfrac{1}{3}\log\dfrac{fS_{ut}}{S_e}$

endurance limit $S_e = k_a k_b k_c k_d k_e S'_e,\ S'_e = 0.5\,S_{ut}$

surface, size $k_a = c_1 S_{ut}^{c_2},\ k_b = 1.24\,d^{-0.107}$

loading

$k_c = 1$ (bending), 0.85 (axial), 0.59 (torsion)

notch $q = \dfrac{1}{1 + \sqrt{a}/\sqrt{r}},\ K_f = 1 + q(K_t - 1)$

Goodman $\dfrac{\sigma_a}{S_e} + \dfrac{\sigma_m}{S_{ut}} = \dfrac{1}{n}$

Soderberg $\dfrac{\sigma_a}{S_e} + \dfrac{\sigma_m}{S_y} = \dfrac{1}{n}$

Gerber $\dfrac{n\sigma_a}{S_e} + \left(\dfrac{n\sigma_m}{S_{ut}}\right)^2 = 1$

ASME elliptic $\left(\dfrac{n\sigma_a}{S_e}\right)^2 + \left(\dfrac{n\sigma_m}{S_y}\right)^2 = 1$

yield (Langer) $\sigma_a + \sigma_m = S_y/n_y$

von Mises $\sigma'_a = \sqrt{\sigma_a^2 + 3\tau_a^2},\ \sigma'_m = \sqrt{\sigma_m^2 + 3\tau_m^2}$

Miner $\sum_i n_i/N_i = 1$

surface ($k_a = c_1 S_{ut}^{c_2}$, S_{ut} in MPa)	c_1	c_2	surface	c_1	c_2
ground	1.58	−0.085	hot-rolled	57.7	−0.718
machined or cold-drawn	4.51	−0.265	as-forged	272	−0.995

Unless stated otherwise, the following assumptions apply. For steel the unmodified endurance limit is taken as $S'_e = 0.5\,S_{ut}$ (for $S_{ut} \le 1400$ MPa). The endurance limit S_e is defined at 10^6 cycles, and the S-N curve is a straight line on log-log axes between 10^3 and 10^6 cycles. The size-factor relation is valid for $2.79 \le d \le 51$ mm; the temperature factor is $k_d = 1$ and the reliability is 50% ($k_e = 1$). The fatigue stress-concentration factor K_f is applied to both the alternating and the mean stress. The factor of safety is denoted n_f for fatigue and n_y for yielding; it is calculated along the load line (stresses increasing in the same proportion). Dimensions in drawings are in mm. In the diagrams the strength limits are black, the yield line is gray, and the operating point is red.

Fatigue and the S-N curve

4.1 ★☆☆ Solution →

Which of the following statements about the stress-life (S-N) behavior of steel and aluminum-alloy parts is correct?

A) For aluminum alloys the S-N curve levels off after 10^6 cycles; at amplitudes below this level the part has infinite life.

B) For most steels the S-N curve levels off at about 10^6–10^7 cycles; at amplitudes below this level (the endurance limit) the part is considered to have infinite life.

C) For lives shorter than 10^3 cycles (low-cycle fatigue) the stress-life approach gives the most accurate result.

D) The endurance limit is independent of the ultimate tensile strength; it has about the same value for all steels.

E) A fatigue crack usually starts inside the part, near the neutral axis in bending.

Effect of mean stress

4.15

★★☆ Solution →

At the critical section of the cam-follower arm of a packaging machine, the bending moment varies between 0 and 95 N·m every revolution (see figure). The section is rectangular: width $b = 10$ mm, and the height h is to be designed. The critical section is at the fillet where the arm joins the hub (A in the figure); here $K_f = 1.35$. For the material $S_y = 520$ MPa; the Marin-modified endurance limit is $S_e = 262$ MPa (assume it is independent of h).

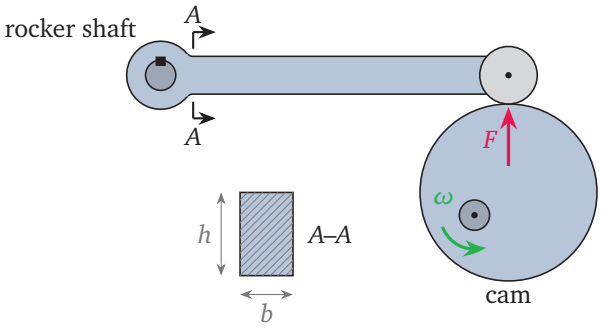

a. Find the minimum height for $n_f = 1.8$ with the ASME elliptic criterion.

b. Round the height up to a whole millimeter; find the fatigue and yield factors of safety.

4.17

★★★ Solution →

On a pedestrian suspension bridge, a hanger rod carrying the deck takes a tensile force between 15 kN and 60 kN, between the empty bridge and the most crowded condition (see figure). The rod is made of quenched and tempered C35 steel ($S_{ut} = 630$ MPa, $S_y = 380$ MPa) and machined; the calculation is to be made for 95% reliability ($k_e = 0.868$). At the shoulder where the rod seats on the supporting beam $K_f = 1.6$ (assume it is independent of the diameter).

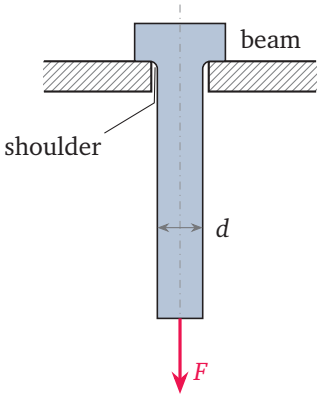

a. Find the minimum diameter for $n_f = 2.2$ with the Goodman criterion; select the diameter as an even number of millimeters.

b. Find the fatigue and yield factors of safety for the selected diameter.

c. Which diameter would be selected if the Soderberg criterion were used?

CHAPTER 7

BOLTS AND POWER SCREWS

lead, lead angle $l = n_a P,\ \tan\lambda = \dfrac{l}{\pi d_2}$

friction angle (trapezoidal) $\tan\rho' = \dfrac{\mu}{\cos 15^\circ}$

raising $T = F\dfrac{d_2}{2}\tan(\lambda+\rho') + \mu_c F\dfrac{d_c}{2}$

lowering $T = F\dfrac{d_2}{2}\tan(\rho'-\lambda)$

self-locking, efficiency

$\lambda < \rho',\ \eta = \dfrac{\tan\lambda}{\tan(\lambda+\rho')} = \dfrac{F\,l}{2\pi T}$

trapezoidal thread

$d_2 = d - \frac{P}{2},\ H_1 = \frac{P}{2},\ p = \dfrac{F}{z\,\pi d_2 H_1}$

bolt group $F' = \dfrac{V}{N},\ F_i'' = \dfrac{M r_i}{\sum r_j^2}$

bolt stiffness $k_b = \dfrac{A_d A_t E}{A_d l_t + A_t l_d}$

members (cone 30°)

$k_m = \dfrac{0.5774\,\pi E d}{2\ln\left(5\dfrac{0.5774\,l + 0.5\,d}{0.5774\,l + 2.5\,d}\right)}$

load sharing

$C = \dfrac{k_b}{k_b + k_m},\ F_b = F_i + CP,\ F_m = F_i - (1-C)P$

preload, torque $F_i = 0.75 A_t S_p,\ T = K F_i d$

factors of safety

$n_p = \dfrac{S_p A_t}{CP + F_i},\ n_L = \dfrac{S_p A_t - F_i}{CP},\ n_0 = \dfrac{F_i}{P(1-C)}$

fatigue

$\sigma_a = \dfrac{C(P_{\max} - P_{\min})}{2A_t},\ \sigma_m = \dfrac{C(P_{\max} + P_{\min})/2 + F_i}{A_t}$

Goodman ($\sigma_i = F_i/A_t$) $n_f = \dfrac{S_e(S_{ut} - \sigma_i)}{S_{ut}\sigma_a + S_e(\sigma_m - \sigma_i)}$

Unless stated otherwise, the following assumptions apply. The profile angle of the trapezoidal thread (ISO 2904) is 30°; d_2 is the pitch diameter and d_3 the minor diameter. The bolt and the clamped members are steel ($E = 207$ GPa); A_t is the tensile-stress area and A_d the major-diameter (shank) area. The member stiffness is calculated with a pressure cone of half-apex angle 30°; washers are neglected. In a reusable connection the preload is $F_i = 0.75 A_t S_p$. The external load is shared equally by the bolts. The bolt endurance limit S_e is the fully corrected value for rolled threads (K_f included); the preload stays constant while the external load increases (the Goodman line starts at σ_i). In bolt groups loaded in shear the load is carried by the bolt shank (fitted bolt), and the members are rigid. Dimensions in drawings are in mm.

Preload and joint stiffness

7.10 ★★☆ Solution →

In the housing cover of a gear pump, the stiffness of one bolt is $k_b = 800$ kN/mm and that of the clamped members is $k_m = 2400$ kN/mm. The bolt is tightened with a preload of $F_i = 40$ kN. The pump pressure creates a separating force of $P = 24$ kN per bolt (see figure).

a. Find the elongation of the bolt and the shortening of the members at assembly; sketch the force–deflection diagram.

b. Under pressure, find the bolt and member forces and the additional elongation of the bolt; show them on the diagram.

c. Find the external load that causes the members to separate and the factor of safety against separation.

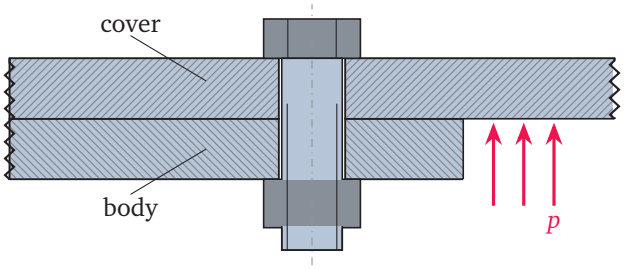

Eccentrically loaded bolt groups

7.16 ★☆☆ Solution →

A cantilever bracket attached to a machine frame with four bolts carries a vertical load of 18 kN at 250 mm from the centroid of the bolt group. The bolts are at the corners of a 120 × 120 mm square (see figure).

a. Find the direct and the moment-induced shear force in each bolt.

b. Find the most heavily loaded bolt and its force.

c. The bolt shank diameter is 16 mm. What is the shear stress?

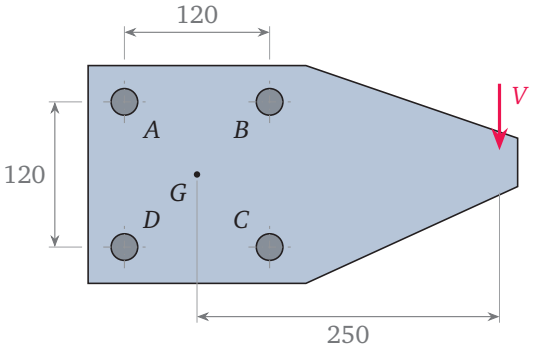

CHAPTER 9

SPRINGS

spring index, stress	$C=\frac{D}{d},\ \tau=K_B\frac{8FD}{\pi d^3}$	Zimmerli + Goodman	
Bergsträsser	$K_B=\frac{4C+2}{4C-3}$		$S_{se}=\frac{S_{sa}}{1-S_{sm}/S_{su}},\ \frac{1}{n_f}=\frac{\tau_a}{S_{se}}+\frac{\tau_m}{S_{su}}$
spring rate	$k=\frac{d^4G}{8D^3N_a}$	extension spring	$F=F_i+ky,\ N_a=N_b+G/E$
squared and ground ends		torsion spring	$k'=\frac{d^4E}{64DN_a},\ \sigma=K_i\frac{32M}{\pi d^3}$
$N_t=N_a+2,\ L_s=dN_t,\ L_0=pN_a+2d$			$K_i=\frac{4C^2-C-1}{4C(C-1)}$
wire strength	$S_{ut}=A/d^m,\ S_{su}=0.67\,S_{ut}$	leaf spring	$\sigma=\frac{6FL}{nbt^2},\ y=\frac{6FL^3}{Enbt^3}$
buckling (steel)	$L_0<2.63\,D/\alpha$	Belleville spring stack	series: same F, y adds
natural frequency	$f_n=\frac{1}{2}\sqrt{k/m_a},\ m_a=\frac{\pi^2d^2DN_a\rho}{4}$		parallel: same y, F adds

Unless stated otherwise, the following assumptions apply. d is the wire diameter, D the mean coil diameter, N_a the number of active coils, and N_t the total number of coils. For steel spring wire $G=79.3$ GPa and $\rho=7850$ kg/m^3. The ends of compression springs are squared and ground, and the spring works between two parallel flat surfaces. The shear stress is corrected with the Bergsträsser factor in both the static and the fatigue calculations. The shear yield strength S_{sy} is given in the problem as a fraction of the tensile strength. The Zimmerli data are for steel spring wires smaller than 10 mm in diameter: for unpeened wire $S_{sa}=241$ MPa, $S_{sm}=379$ MPa; for shot-peened wire $S_{sa}=398$ MPa, $S_{sm}=534$ MPa. Dimensions in drawings are in mm.

Materials, static design, buckling, and vibration

9.6 ★★☆ Solution →

In a truck clutch, 12 helical springs arranged around the circumference press the pressure plate; with the clutch engaged, each spring applies 500 N (see figure). The springs are made of chrome-vanadium alloy wire ($S_{ut}=A/d^m$, $A=2005$ MPa · mm^m, $m=0.168$; $S_{sy}=0.50\,S_{ut}$); $d=4.5$ mm, $D=26$ mm, $N_a=6.5$, $L_0=58$ mm. When the clutch is disengaged, the springs are compressed by a further 2.5 mm.

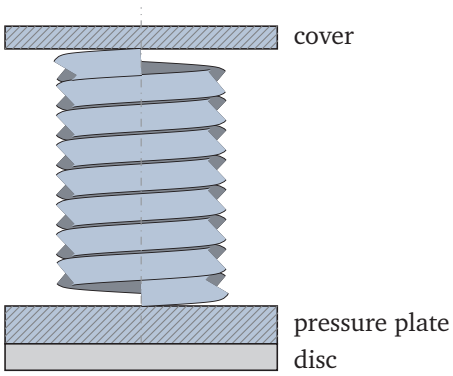

a. Find the tensile strength and the shear yield strength of the wire.

b. Find the spring rate, the spring force at disengagement, the shear stress, and the factor of safety.

c. What is the factor of safety if the spring is compressed to its solid length? How much margin to the solid length remains in the disengaged position?

Leaf and Belleville springs

9.14

★☆☆ Solution →

A semi-elliptic leaf spring is used on the axle of a single-axle cargo trailer. The span between the spring eyes is 900 mm, and the spring is loaded at its middle by the axle with a force of 36 kN (see figure). The spring consists of 7 leaves with a 70×12 mm cross section, $E = 207$ GPa. The spring is to be calculated as an equivalent triangular plate (uniform strength).

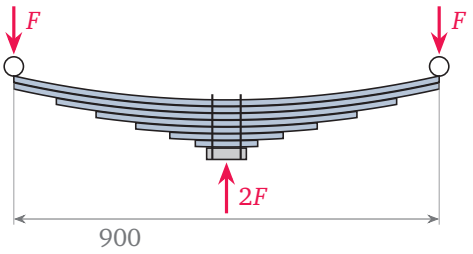

a. Find the bending stress in the leaves, the deflection of the midpoint, and the spring rate.

b. At least how many leaves are needed for the bending stress not to exceed 600 MPa? What is the deflection in this case?

Mixed problems

9.17

★★★ Solution →

The valve spring of a high-speed gasoline engine is made of shot-peened chrome-vanadium alloy wire ($A = 2005$ MPa · mm^m, $m = 0.168$; $S_{sy} = 0.50\,S_{ut}$): $d = 4.0$ mm, $D = 22$ mm, $N_a = 5$, $L_0 = 46$ mm (see figure). With the valve closed the spring force is 240 N, and the valve lift is 9 mm. The maximum engine speed is 5500 rpm; the camshaft turns at half the crankshaft speed.

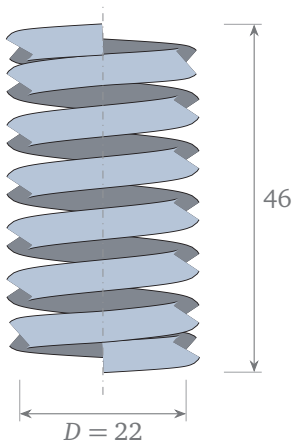

a. Find the spring rate and the spring force with the valve fully open.

b. Find the fatigue factor of safety with the Zimmerli data and the Goodman criterion.

c. Find the spring lengths with the valve closed and fully open, and the margin remaining to the solid length.

d. Find the natural frequency. Is the criterion that the natural frequency be at least 15 times the cam frequency met? Comment.

SOLUTIONS

4 FATIGUE

4.1

← Problem

For steels the S-N curve levels off after a knee; this level is the endurance limit. At amplitudes below it a crack does not grow, and the part is regarded as having infinite life. **B** is correct.

- (A): Aluminum alloys have no distinct endurance limit; the curve keeps falling. For this reason the fatigue strength of aluminum is given for a specified life (such as 5×10^8 cycles).
- (C): In the low-cycle region the stresses exceed the yield strength and plastic strain governs; here the strain-life approach is used.
- (D): The endurance limit increases with the ultimate tensile strength; approximately $S'_e = 0.5\,S_{ut}$ ($S_{ut} \le 1400$ MPa).
- (E): In bending the stress is greatest at the surface, and notches and roughness are also at the surface; a crack usually starts at the surface. At the neutral axis the bending stress is zero.

ANSWER B

4.15

← Problem

a. Since the moment starts from zero, $\sigma_a = \sigma_m = \sigma$; $M_a = M_m = 47.5$ N·m. On the ASME ellipse $n_f \sigma \sqrt{1/S_e^2 + 1/S_y^2} = 1$:

$$\sqrt{\frac{1}{262^2} + \frac{1}{520^2}} = 4.274 \times 10^{-3}\ \text{MPa}^{-1},$$

$$\sigma = \frac{1}{1.8(4.274 \times 10^{-3})} = 130.0\ \text{MPa}.$$

$$\sigma = K_f \frac{6M_a}{bh^2} \Rightarrow h^2 = \frac{1.35(6)(47\,500)}{(10)(130.0)} = 296.0,$$

$$h_{\min} = 17.20 \approx 17.2\ \text{mm}.$$

b. For $h = 18$ mm:

$$\sigma_a = \sigma_m = \frac{1.35(6)(47\,500)}{(10)(18)^2} = 118.75\ \text{MPa},$$

$$n_f = \frac{1}{(118.75)(4.274 \times 10^{-3})} = 1.970 \approx 1.97,$$

$$n_y = \frac{S_y}{\sigma_a + \sigma_m} = \frac{520}{237.5} = 2.189 \approx 2.19.$$

Because the ASME ellipse passes through the yield strength, it also bounds the region near yielding; the Langer check is still made, and here fatigue governs.

ANSWER a. $h_{\min} = 17.2$ mm b. $h = 18$ mm: $n_f = 1.97$, $n_y = 2.19$

ertansinansahin.com

4.17

← Problem

a. Under axial load $k_b = 1$, $k_c = 0.85$:

$$k_a = 4.51(630)^{-0.265} = 0.8173,$$

$$S_e = (0.8173)(0.85)(0.868)(315) = 189.9 \text{ MPa}.$$

$F_m = 37.5$ kN, $F_a = 22.5$ kN. The stresses are $K_f F/A$ with $A = \pi d^2/4$; the Goodman equation is solved for A:

$$\frac{K_f}{A}\left(\frac{F_a}{S_e} + \frac{F_m}{S_{ut}}\right) = \frac{1}{n_f},$$

$$d^2 = \frac{4 n_f K_f}{\pi}\left(\frac{22\,500}{189.9} + \frac{37\,500}{630}\right),$$

$$d^2 = 4.4818\,(118.46 + 59.52) = 797.7 \text{ mm}^2,$$

$$d_{\min} = 28.24 \approx 28.2 \text{ mm} \Rightarrow d = 30 \text{ mm}.$$

b. $d = 30$ mm, $A = 706.9$ mm^2:

$$n_f = \frac{706.9}{1.6\,(118.46 + 59.52)} = 2.482 \approx 2.48,$$

$$\sigma_{\max} = K_f \frac{F_{\max}}{A} = \frac{1.6(60\,000)}{706.9} = 135.8 \text{ MPa},$$

$$n_y = \frac{380}{135.8} = 2.798 \approx 2.80.$$

c. In Soderberg S_y replaces S_{ut}:

$$d^2 = 4.4818\left(118.46 + \frac{37\,500}{380}\right) = 973.2,$$

$$d_{\min} = 31.20 \approx 31.2 \text{ mm} \Rightarrow d = 32 \text{ mm}.$$

Because the mean force is large ($F_m > F_a$), the choice of criterion changes the result: Soderberg increases the diameter by one standard size. For hanger members with a large dead load, Goodman is sufficient because yielding is checked separately.

ANSWER a. $d_{\min} = 28.2$ mm, $d = 30$ mm
b. $n_f = 2.48$, $n_y = 2.80$ c. $d_{\min} = 31.2$ mm, $d = 32$ mm

7 BOLTS AND POWER SCREWS

7.10

← Problem

a. At assembly:

$$\delta_b = \frac{F_i}{k_b} = \frac{40}{800} = 0.0500 \text{ mm},$$

$$\delta_m = \frac{F_i}{k_m} = \frac{40}{2400} = 0.01667 \text{ mm}.$$

b. $C = 800/3200 = 0.25$:

$$F_b = F_i + CP = 40 + 0.25(24) = 46.0 \text{ kN},$$

$$F_m = F_i - (1 - C)P = 40 - 0.75(24) = 22.0 \text{ kN},$$

$$\Delta\delta = \frac{CP}{k_b} = \frac{6.0}{800} = 0.00750 \text{ mm}.$$

In the diagram, the bolt line rises from the origin with slope k_b, and the member line falls from the assembly point with slope $-k_m$. The external load P is the vertical gap between the two lines at $x = 0.0575$ mm (red).

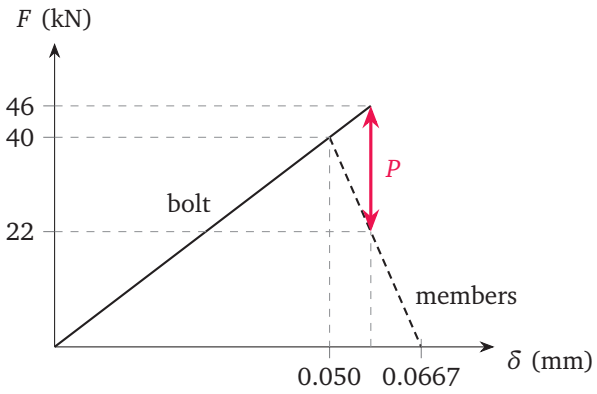

c. Separation occurs when the member force becomes zero:

$$P_0 = \frac{F_i}{1 - C} = \frac{40}{0.75} = 53.33 \approx 53.3 \text{ kN},$$

$$n_0 = \frac{53.33}{24} = 2.222 \approx 2.22.$$

ANSWER a. $\delta_b = 0.0500$ mm, $\delta_m = 0.01667$ mm
b. $F_b = 46.0$ kN, $F_m = 22.0$ kN, $\Delta\delta = 0.00750$ mm
c. $P_0 = 53.3$ kN, $n_0 = 2.22$

ertansinansahin.com

7.16 ← Problem

a. The direct shear in each bolt acts upward (balancing the load):

$$F' = \frac{18\,000}{4} = 4500\ \text{N} = 4.50\ \text{kN}.$$

Moment $M = 18\,000(250) = 4.5 \times 10^6$ N·mm (clockwise); every bolt is at a distance $r = 60\sqrt{2} = 84.85$ mm:

$$F'' = \frac{Mr}{4r^2} = \frac{4.5 \times 10^6}{4(84.85)} = 13\,260\ \text{N} \approx 13.3\ \text{kN}.$$

F'' is perpendicular to the radius and tends to turn the group counterclockwise.

b. In bolts B and C, near the load, the vertical component of F'' ($13\,258/\sqrt{2} = 9375$ N) points upward and adds to F':

$$R = \sqrt{9375^2 + (9375 + 4500)^2},$$

$$R = 16\,750\ \text{N} \approx 16.7\ \text{kN}.$$

In A and D the vertical components are opposite, and the resultant is smaller.

c. Shank area $\pi(16)^2/4 = 201.1$ mm^2:

$$\tau = \frac{16\,745}{201.1} = 83.28 \approx 83.3\ \text{MPa}.$$

ANSWER a. $F' = 4.50$ kN, $F'' = 13.3$ kN b. B and C, $R = 16.7$ kN c. $\tau = 83.3$ MPa

9 SPRINGS

9.6 ← Problem

a. Wire strength:

$$S_{ut} = \frac{2005}{4.5^{0.168}} = \frac{2005}{1.2875} = 1557\ \text{MPa},$$

$$S_{sy} = 0.50(1557) = 778.7\ \text{MPa}.$$

b. $C = 26/4.5 = 5.778$, $K_B = 25.11/20.11 = 1.2486$:

$$k = \frac{(4.5)^4(79\,300)}{8(26)^3(6.5)} = 35.58 \approx 35.6\ \text{N/mm},$$

$$F_2 = 500 + 35.58(2.5) = 588.95 \approx 589\ \text{N},$$

$$\tau_2 = 1.2486\,\frac{8(588.95)(26)}{\pi(4.5)^3} = 534.3\ \text{MPa},$$

$$n = \frac{778.7}{534.3} = 1.457 \approx 1.46.$$

c. $y_1 = 500/35.58 = 14.05$ mm;
$L_s = 4.5(8.5) = 38.25$ mm,
$y_s = 58 - 38.25 = 19.75$ mm:

$$F_s = 35.58(19.75) = 702.7\ \text{N},$$

$$\tau_s = 534.3\,\frac{702.7}{588.95} = 637.5\ \text{MPa},$$

$$n_s = \frac{778.7}{637.5} = 1.2215 \approx 1.22.$$

In the disengaged position the length is $58 - 14.05 - 2.5 = 41.45$ mm, and $41.45 - 38.25 = 3.20$ mm remains to the solid length. The factor of safety at the solid length only just reaches the recommended minimum (≈ 1.2): even if an assembly error or excessive pedal travel brings the spring to its solid length, it does not yield, but the margin is small.

ANSWER a. $S_{ut} = 1557$, $S_{sy} = 778.7$ MPa b. $k = 35.6$ N/mm, $F_2 = 589$ N, $\tau_2 = 534.3$ MPa, $n = 1.46$ c. $n_s = 1.22$; margin 3.20 mm

9.14 ← Problem

Each half-spring is a cantilever of length $L = 450$ mm carrying $F = 18$ kN at its end.

a. Stress, deflection, and spring rate:

$$\sigma = \frac{6FL}{nbt^2} = \frac{6(18\,000)(450)}{7(70)(12)^2} = 688.8\ \text{MPa},$$

$$y = \frac{6FL^3}{Enbt^3} = \frac{6(18\,000)(450)^3}{207\,000(7)(70)(12)^3},$$

$$y = 56.15 \approx 56.2\ \text{mm},$$

$$k = \frac{2F}{y} = \frac{36\,000}{56.15} = 641.1 \approx 641\ \text{N/mm}.$$

b. The stress is inversely proportional to the number of leaves:

$$n \geq 7\,\frac{688.8}{600} = 8.036 \Rightarrow n = 9,$$

$$\sigma = 688.8\,\frac{7}{9} = 535.7\ \text{MPa},$$

$$y = 56.15\,\frac{7}{9} = 43.67 \approx 43.7\ \text{mm}.$$

Adding leaves makes the spring both stronger and stiffer. In a real spring, friction between the leaves provides damping, and the calculation does not fit

ertansinansahin.com

exactly at the leaf ends; the equivalent triangular plate is a preliminary sizing.

ANSWER a. $\sigma = 688.8$ MPa, $y = 56.2$ mm, $k = 641$ N/mm b. $n = 9$: $\sigma = 535.7$ MPa, $y = 43.7$ mm

9.17 ← Problem

a. Spring rate and force:

$$k = \frac{(4)^4(79\,300)}{8(22)^3(5)} = 47.66 \approx 47.7 \text{ N/mm},$$

$$F_2 = 240 + 47.66(9) = 669.0 \approx 669 \text{ N}.$$

b. $C = 5.5$, $K_B = 24/19 = 1.2632$; $F_a = 214.5$ N, $F_m = 454.5$ N:

$$\tau_a = 1.2632\,\frac{8(214.5)(22)}{\pi(4)^3} = 237.17 \text{ MPa},$$

$$\tau_m = 237.17\,\frac{454.5}{214.5} = 502.5 \text{ MPa}.$$

$$S_{ut} = \frac{2005}{4^{0.168}} = 1588 \text{ MPa},$$

$$S_{su} = 0.67(1588.4) = 1064.3 \text{ MPa},$$

$$S_{se} = \frac{398}{1 - 534/1064.3} = 798.8 \text{ MPa},$$

$$\frac{1}{n_f} = \frac{237.17}{798.8} + \frac{502.5}{1064.3} = 0.2969 + 0.4721,$$

$$n_f = 1.300 \approx 1.30.$$

c. $y_1 = 240/47.66 = 5.035$ mm; $L_s = 4(5 + 2) = 28$ mm:

$$L_1 = 46 - 5.035 = 40.96 \text{ mm},$$

$$L_2 = 40.96 - 9 = 31.96 \text{ mm},$$

$$L_2 - L_s = 31.96 - 28 = 3.96 \text{ mm}.$$

The margin is 44% of the lift; even if the valve floats at overspeed, the spring does not go solid.

d. Active mass and natural frequency:

$$m_a = \frac{\pi^2(0.004)^2(0.022)(5)(7850)}{4} = 0.03409 \text{ kg},$$

$$f_n = \frac{1}{2}\sqrt{\frac{47\,660}{0.03409}} = 591.2 \approx 591 \text{ Hz}.$$

At 5500 rpm the cam frequency is $5500/120 = 45.83$ Hz; the ratio is $591.2/45.83 = 12.9 < 15$: the criterion is not met. The criterion holds only up to $(591.2/15)(120) = 4730$ rpm. Reducing the number of coils raises the frequency but stiffens the spring and increases the stress amplitude; the fatigue factor of safety is already 1.30. The solution is a variable-pitch (progressive) or conical ("beehive") spring, or a nested double spring.

ANSWER a. $k = 47.7$ N/mm, $F_2 = 669$ N b. $n_f = 1.30$ c. $L_1 = 40.96$, $L_2 = 31.96$ mm, margin 3.96 mm d. $f_n = 591$ Hz, ratio $12.9 < 15$: not met (limit 4730 rpm)

ertansinansahin.com

IN THE FULL BOOK

- 9 chapters and 162 problems, all with step-by-step solutions.
- A reminder box at the start of each chapter, summarizing the relations the problems rely on.
- Basic, intermediate and advanced problems, each with a dotted area for your own work.
- One-click links from each problem to its solution and back.



ertansinansahin.com